Type 2 surge protection plug - VAL-MS 580-ST - 2920434

Type 2 surge protection plug with high-capacity varistor for VAL-MS base element, thermal monitoring, visual fault warning. Design: 580 V AC

Product Features

- Single-channel, DIN-rail mountable protective devices
- Base element with/without floating remote indication contact
- Disconnect device on each individual plug
- Consists of base element and plug
- Optical, mechanical status indication for the individual arresters
- Mechanical coding of all slots

Key commercial data

Packing unit	1 pc
Weight per Piece (excluding packing)	60.0 GRM
Custom tariff number	85363030
Country of origin	Germany

Technical data

Dimensions

Height	52.4 mm
Width	17.5 mm
Depth	55.3 mm
Horizontal pitch	1 Div.

Ambient conditions

Degree of protection	IP20
Ambient temperature (operation)	-40 °C ... 80 °C
Ambient temperature (storage/transport)	-40 °C ... 80 °C

Type 2 surge protection plug - VAL-MS 580-ST - 2920434

Technical data

Ambient conditions

Altitude	≤ 2000 m (amsl (above mean sea level))
Permissible humidity (operation)	5 % ... 95 %
Shock (operation)	25g
Vibration (operation)	5g

General

Standards/specifications	IEC 61643-11 2011
	EN 61643-11 2012
IEC test classification	II
	T2
EN type	T2
SPD design	Voltage-limiting type
Mode of protection	L-PEN
	L-PE
Mounting type	On base element
Color	black
Housing material	PA 6.6
Pollution degree	2
Distance between live and grounded parts	5 mm
Inflammability class according to UL 94	V-0
Type	Male
Number of positions	1
Surge protection fault message	Optical

Additional descriptions

Note	Usable in all low-voltage systems between L-N or L-PEN. Only usable in IT Systems between L-PE, if the exposed-conductive-parts (bodies) of the equipment of the low-voltage installation is connected to the earthing arrangement of the transformer substation. (interconnected earthing arrangement of the HV-transformer substation with the bodies of the LV-installation. $R_E = R_A$ accordance to IEC 60364-4-442 / VDE 0100-442 Fig. 44D / Example a)

Protective circuit

Nominal voltage U_N	400/690 V AC (TN)
	500 V AC (IT)
Nominal frequency f_N	50 Hz (60 Hz)
Maximum continuous operating voltage U_C	580 V AC
Residual current I_{PE}	≤ 0.25 mA
Standby power consumption P_C	≤ 150 mVA
Nominal discharge current I_n (8/20) µs	15 kA

Type 2 surge protection plug - VAL-MS 580-ST - 2920434

Technical data

Protective circuit

Maximum discharge current I_{max} (8/20) µs	30 kA
Short-circuit current rating I_{SCCR}	25 kA
Voltage protection level U_p	≤ 2.5 kV
Residual voltage U_{res}	≤ 2.5 kV (at I_n)
	≤ 2.3 kV (at 10 kA)
	≤ 2.1 kV (at 5 kA)
	≤ 1.9 kV (at 3 kA)
TOV behavior at U_T	690 V AC (5 s / withstand mode)
Response time t_A	≤ 25 ns
Max. backup fuse with branch wiring	125 A AC (gG)

Connection data

Connection method	VALVETRAB plug-in system

UL specifications

UL class	Type 4 SPD for Type 2 applications
Maximum continuous operating voltage MCOV (L-N)	580 V AC
Nom. voltage	400 V AC
Mode of protection	L-N
Power distribution system	1
Nominal frequency	50/60 Hz
Voltage protection rating VPR (L-N)	2 kV
Nominal discharge current I_n (L-N)	10 kA

Classifications

eCl@ss

eCl@ss 4.0	27140201
eCl@ss 4.1	27130801
eCl@ss 5.0	27130801
eCl@ss 5.1	27130801
eCl@ss 6.0	27130805
eCl@ss 7.0	27130805
eCl@ss 8.0	27130805

ETIM

ETIM 2.0	EC000941
ETIM 3.0	EC000941

Type 2 surge protection plug - VAL-MS 580-ST - 2920434

Classifications

ETIM

ETIM 4.0	EC000941
ETIM 5.0	EC000941

UNSPSC

UNSPSC 6.01	30212010
UNSPSC 7.0901	39121610
UNSPSC 11	39121610
UNSPSC 12.01	39121610
UNSPSC 13.2	39121620

Approvals

Approvals

Approvals

UL Recognized / KEMA-KEUR / ÖVE / cUL Recognized / GOST / CCA / IECEE CB Scheme / KEMA-KEUR / ÖVE / cULus Recognized

Ex Approvals

Approvals submitted

Approval details

UL Recognized

KEMA-KEUR

ÖVE

Type 2 surge protection plug - VAL-MS 580-ST - 2920434

Approvals

cUL Recognized

GOST

CCA

IECEE CB Scheme

KEMA-KEUR

ÖVE

cULus Recognized

Drawings

Dimensioned drawing

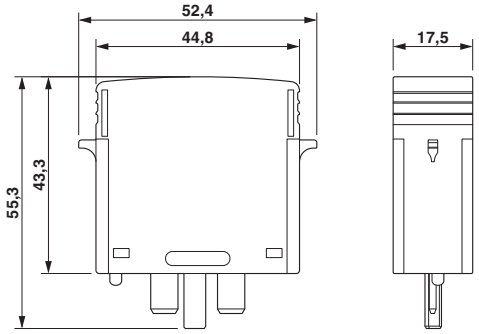

Circuit diagram