ISSUE DATE: 07/08/2014

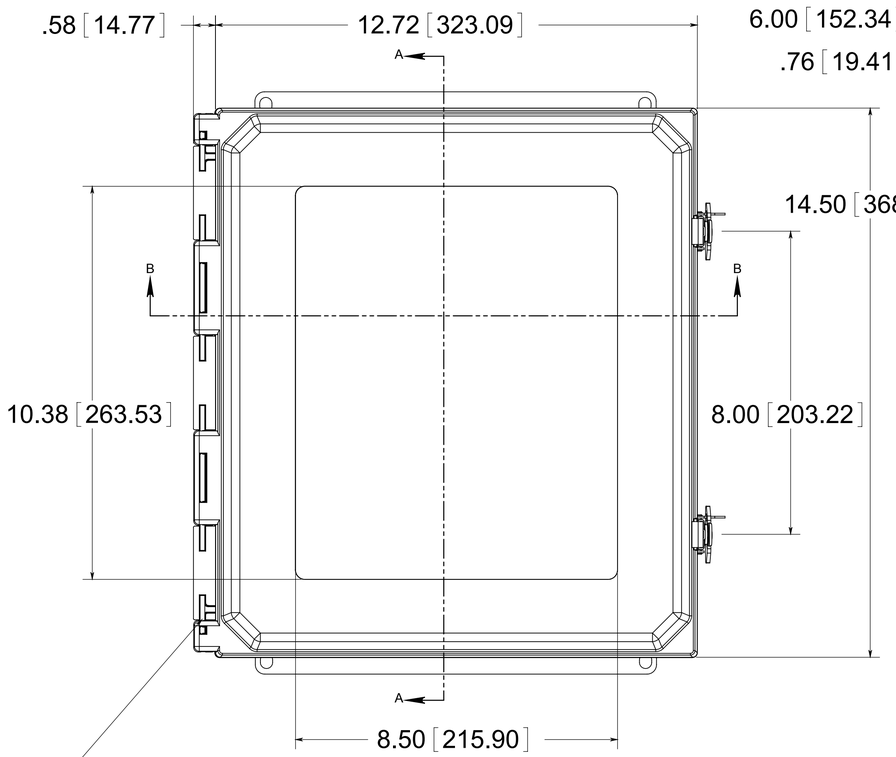

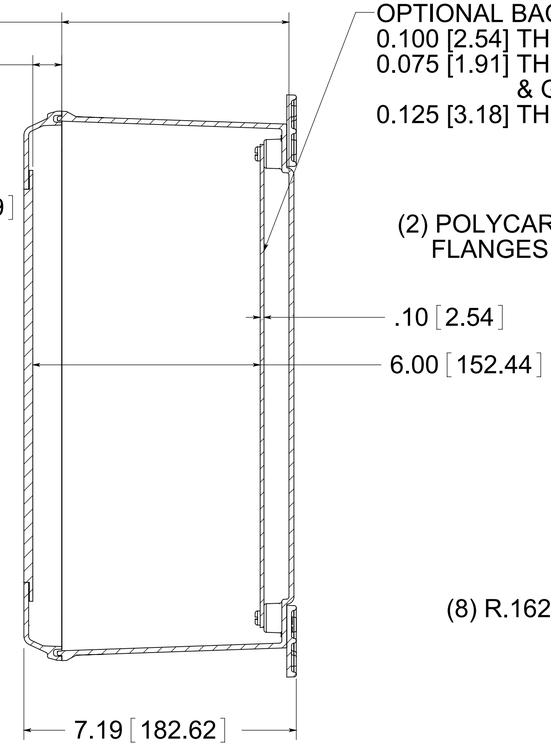

FRONT VIEW
WITH COVER REMOVED
AND BACK PANEL DISPLAYED

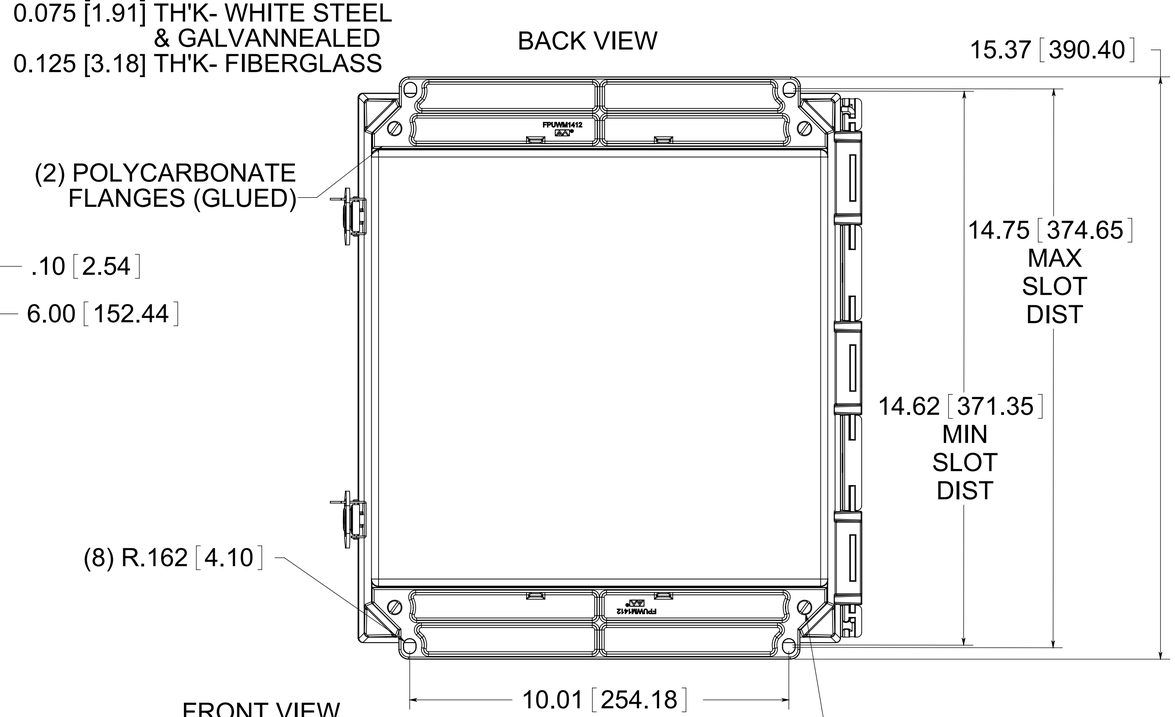

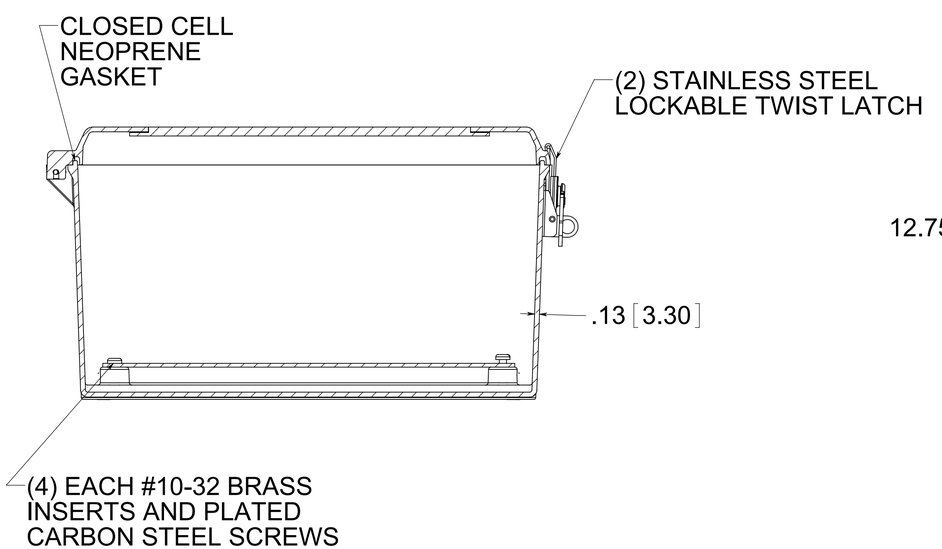

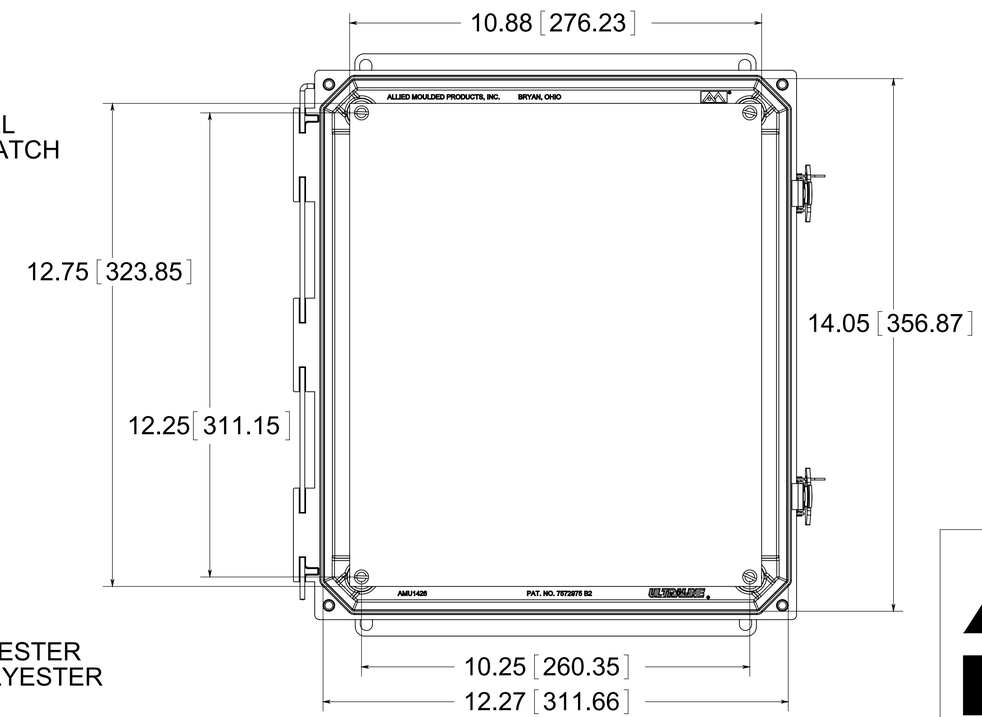

MATERIAL:
BOX-COMPRESSION MOLDED FIBERGLASS REINFORCED POLYESTER
COVER- COMPRESSION MOLDED FIBERGLASS REINFORCED POLYESTER
CLEAR COVER AND WINDOWS- POLYCARBONATE

PART No. PJU14126TWF
for more information visit
www.hammfg.com
Data subject to change without notice

Drawing Not to Scale