ASSEMBLY P/N	HEIGHT	COATING	TOOLING
1802890000	40	BLACK ANODIZED	TOOLED
1802890001	40	NO FINISH	NOT TOOLED/ CONTACT FACTORY
1802890002	60	BLACK ANODIZED	NOT TOOLED/ CONTACT FACTORY
1802890003	60	NO FINISH	NOT TOOLED/ CONTACT FACTORY
1802890004	80	BLACK ANODIZED	NOT TOOLED/ CONTACT FACTORY
1802890005	80	NO FINISH	NOT TOOLED/ CONTACT FACTORY

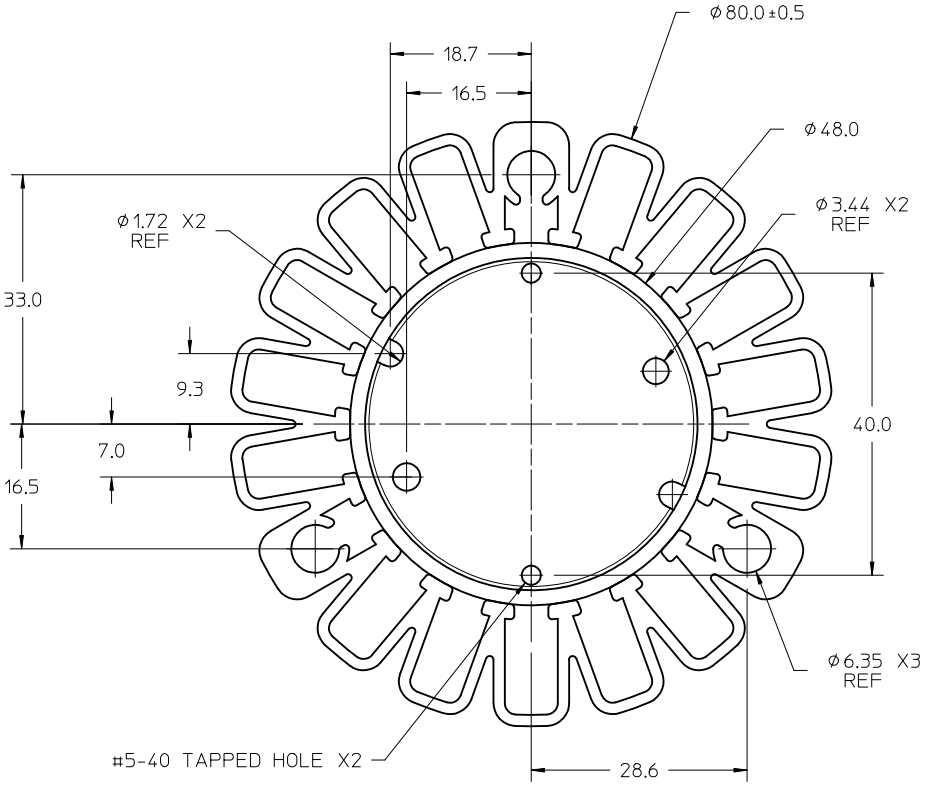

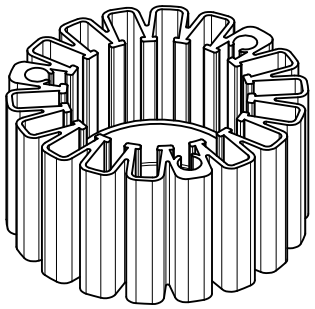

BOTTOM

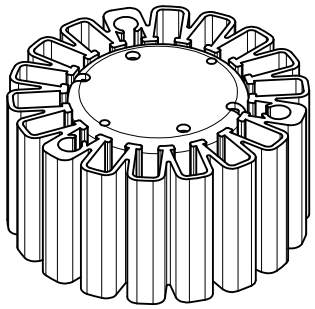

TOP

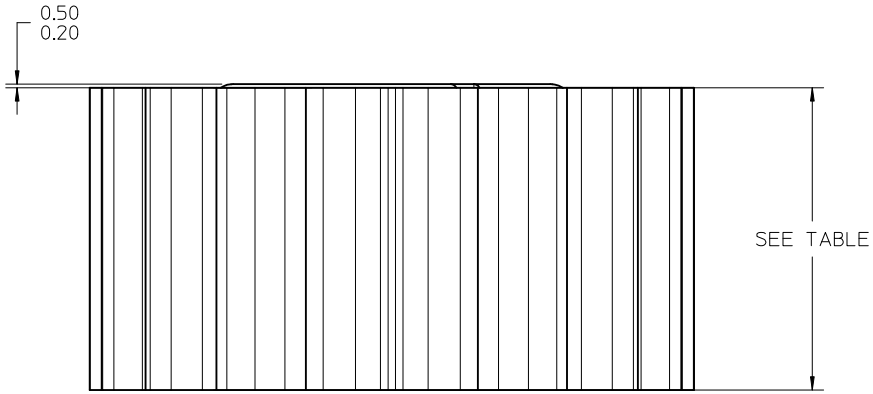

ACCOMMODATES MOLEX LED ARRAY HOLDERS FOR :

BRIDGELUX ES
CREE CXA 20
CREE MPL
CITIZEN C340

NOTES:

1) MATERIAL: ALUMINUM

2) HEIGHT CAN BE CHANGED BASED ON THERMAL REQUIREMENTS

3) USE OF STANDOFFS SUGGESTED FOR BETTER AIRFLOW

EC NO: SSL2011-0093
DRWN:MSERWACKI 2011/03/11
CH'KD:
APPR:DMCGOWAN 2011/07/19
DESCRIPTION
REV
A

QUALITY SYMBOLS
F/A =0
F/C =0
F/P =0

GENERAL TOLERANCES (UNLESS SPECIFIED)

	mm	INCH
4 PLACES	± ---	± ---
3 PLACES	± ---	± ---
2 PLACES	± 0.13	± ---
1 PLACE	± 0.25	± ---
ANGULAR ±1/2°		

DRAFT WHERE APPLICABLE MUST REMAIN WITHIN DIMENSIONS

DIMENSION STYLE: MM ONLY
SCALE: 1:1
DESIGN UNITS: METRIC
THIRD ANGLE PROJECTION

DRAWN BY: MSERWACKI DATE: 2011/03/11
CHECKED BY: DATE:
APPROVED BY: DMCGOWAN DATE: 2011/07/12
MATERIAL NO.: EM-180289-0000
SIZE: C

TITLE: 80 MM HEATSINK ASSEMBLY

molex MOLEX INCORPORATED

DOCUMENT NO.: SD-180289-000
SHEET NO.: 1 OF 1

THIS DRAWING CONTAINS INFORMATION THAT IS PROPRIETARY TO MOLEX INCORPORATED AND SHOULD NOT BE USED WITHOUT WRITTEN PERMISSION