THIS DRAWING IS UNPUBLISHED. RELEASED FOR PUBLICATION
COPYRIGHT © BY TYCO ELECTRONICS CORPORATION. ALL RIGHTS RESERVED.

REVISIONS					
LTR	DESCRIPTION	DATE	DWN	APVD
B	REV PER ECO-09-000306	10DEC2008	VL	LR

MECHANICAL:

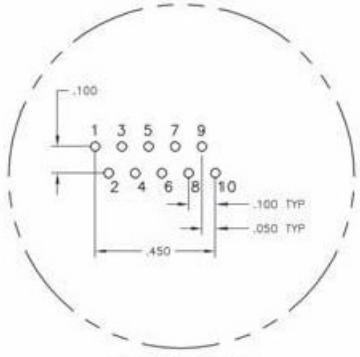

Pin Designations

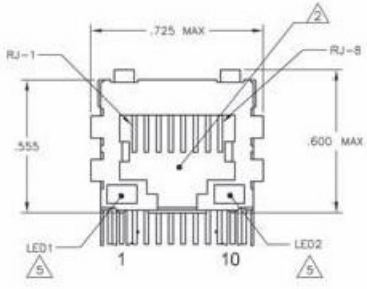

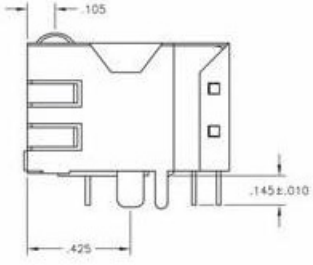

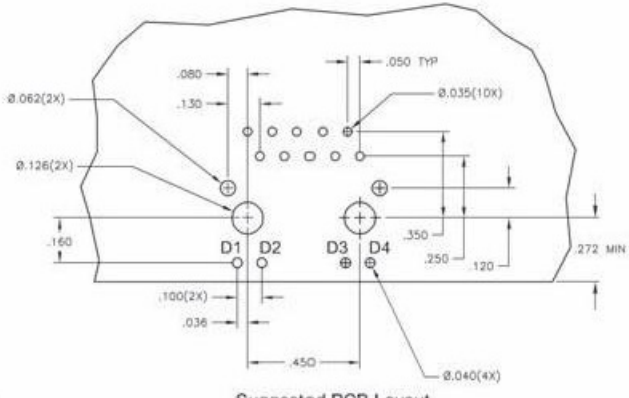

Suggested PCB Layout

(Component Side)

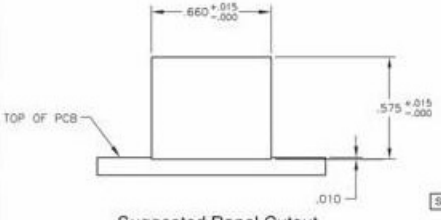

Suggested Panel Cutout

4G02 GIGABIT MAGNETIC CIRCUIT

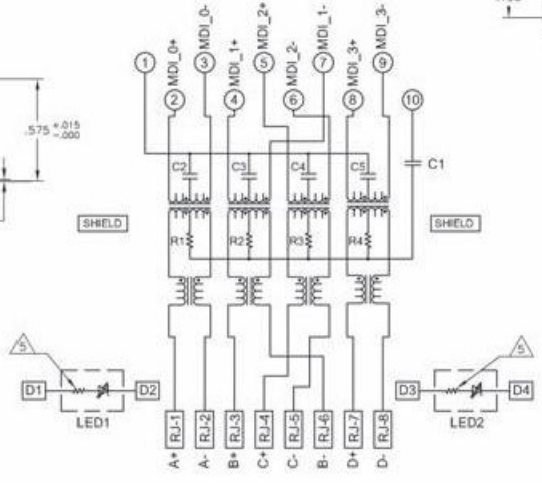

C1 =1000 pF, 2kV CAPACITOR

R1-R4 = 75 OHMS, 1/16 W RESISTORS

C2-C5 = 0.1 uF, 50V CAPACITORS

1. MATERIALS:
HOUSING - THERMOPLASTIC PET POLYESTER FLAMMABILITY RATING UL 94V-0
SHIELD - .010" THICK, C26800 BRASS PREPLATED WITH 30µINCH MIN SEMI-BRIGHT NICKEL. SOLDER TABS POST DIPPED WITH 100µINCH MIN SAC SOLDER.
MOD JACK CONTACTS - 0.015" X 0.018" PHOSPHOR BRONZE, 50µINCH MIN OVERALL NICKEL UNDERPLATE WITH SELECT 50µINCH MIN HARD GOLD FINISH PLATE.
SOLDERTAILS WITH 100µINCH MIN MATTE TIN AND/OR SAC SOLDER DIP.
LIGHT EMITTING DIODE(LED) - DIFFUSED EPOXY LENS, .020" X .020" CARBON STEEL WIREFRAME LEADS PRE-PLATED WITH 80µINCH SILVER OVER 40µINCH NICKEL UNDERPLATE OVER 40µINCH COPPER UNDERPLATE. POST-PLATED WITH 100µINCH MIN MATTE TIN AND/OR SAC SOLDER DIP OR PURE TIN SOLDER DIP.

2. RJ45 JACK CAVITY CONFORMS TO FCC RULES AND REGULATIONS PART 68, SUB PART F.

3. MAGNETICS
-IMPEDANCE: 100 OHMS
-TURNS RATIO (CHIP-CABLE): 1:1 ALL FOUR PAIRS
-OPEN CIRCUIT INDUCTANCE (OCL): 350µH MIN @100kHz, 0.1VRMS, 8mADC BIAS FROM 0°C TO 70°C, ALL FOUR PAIRS
-ALL FOUR PAIRS BI-DIRECTIONAL
-PERFORMANCE @ 25°C
INSERTION LOSS (IL): 1.1dB MAX FROM 0.5MHz TO 100MHz
RETURN LOSS (RL): 18dB MIN FROM 0.5MHZ TO 40MHz
12-20LOG(f/80)dB MIN FROM 40.1MHz TO 100MHz
CROSSTALK ATTENUATION: 35dB MIN FROM 0.5MHz TO 40MHz
33-20*LOG(f/50)dB MIN FROM 40.1MHz TO 100MHz
COMMON MODE REJECTION RATIO (CMRR): 30dB MIN FROM 0.5MHz TO 100MHz
-ISOLATION VOLTAGE: COMPLIES WITH IEEE802.3 2002, PARA 40.6.1.1, ITEM b.

4. OPERATING TEMPERATURE: FROM 0°C - +70°C.

5. LEDS WITH BUILT-IN RESISTOR
LEDS ARE DRIVEN WITH 5V VOLTAGE AND THE MAX OPERATING CURRENT IS 20mA.
LED COLOR: DOMINANT WAVELENGTH (λD): GREEN 568 nm TYP @ VF=5V
FORWARD CURRENT (IF): GREEN 12mA TYP @ VF=5V

6. THE MAGNETICS ARE SYMMETRICAL, AND SUPPORT AUTO-MDI/MDIX.

7. TYCO ELECTRONICS LOGO, PART NUMBER, DATE CODE, COUNTRY OF ORIGIN AND AGENCY APPROVAL MARKING IN APPROXIMATE LOCATION SHOWN.

8. THE PART IS RECOMMENDED FOR WAVE SOLDERING PROCESS. PREHEAT TEMPERATURE IS 120°C TO 160°C, 120 SECONDS TO 180 SECONDS. PEAK WAVE SOLDERING TEMPERATURE IS 260°C MAX, 10 SECONDS MAX.

GREEN	GREEN	1-6605458-1
LED1 5	LED2 5	PART NUMBER

THIS DRAWING IS A CONTROLLED DOCUMENT.

DRAWN: L. VARELA - 00CK3
CHECKED: D. FARDLE
APVD: D. FARDLE

Tyco Electronics — Tyco Electronics Corporation, Changfeng,China

1X1 MAG45(TM), MODULAR JACK (10 PIN HORIZ), 4G2 SCHEMATIC, 4G02 GIGABIT CIRCUIT, SHIELDED, DECOUPLING CAPACITOR, WITH RESISTOR LEDS

PRODUCT SPEC: 108-2100
APPLICATION SPEC: —
WEIGHT: —
MATERIAL: 1
FINISH: 1

SIZE A1 | CODE IDENT 00779 | DRAWING NO 1-6605458 | RESTRICTED TO —

CUSTOMER DRAWING | SCALE NTS | SHEET 1 OF 1 | REV B